ASSEMBLY & PRODUCT CARE

STOOL

5055999244763

Thank you for purchasing this PRODUCT. Please read the instructions carefully before use to ensure safe and satisfactory operation of this product.

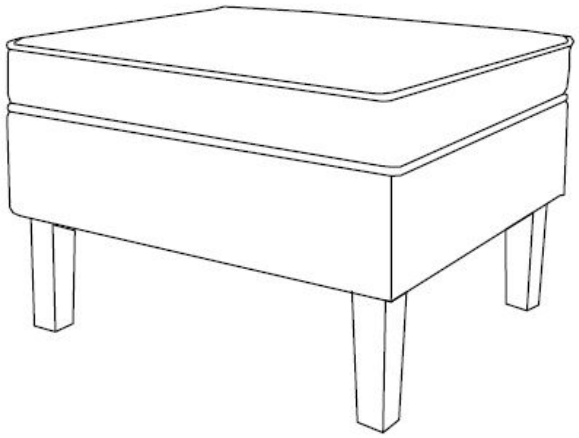

Pre-assembly preparation

Please ensure instructions are read in full before attempting to assemble this product

You will need

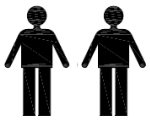

Please check the pack contents before attempting to assemble this product. A full checklist of components is given in this leaflet. If any components are missing, please contact the retailer from whom you bought this product.

This product is **HEAVY**, it should be assembled as near as possible to the point of use. **TAKE CARE WHEN LIFTING** to avoid personal injury and (or) damage to the product.

This product takes approximately **15 MINUTES** to assemble with **2 PEOPLE**.

The fittings pack contains **SMALL ITEMS** which should be **KEPT AWAY FROM YOUNG CHILDREN.**

Read this leaflet in full before commencing assembly.

Fittings and parts checklist

Part	Description	Image	Qty
A	Leg		4
B	Bolt M8*55		8
C	Washer M8*16		8
D	Spring washer M8*15		8
E	Spanner Ø5		1
F	Adjustable feet		4

Step by step assembly instructions

Step One

With the Seat Top upside down, insert the leg to the position .Then using Washer (C), Spring washer (D) , Bolt (B)and Spanner (E), fix the Legs (A) into the bolt holes provided, hand tight. Spin Adjustable feet (F) to the legs

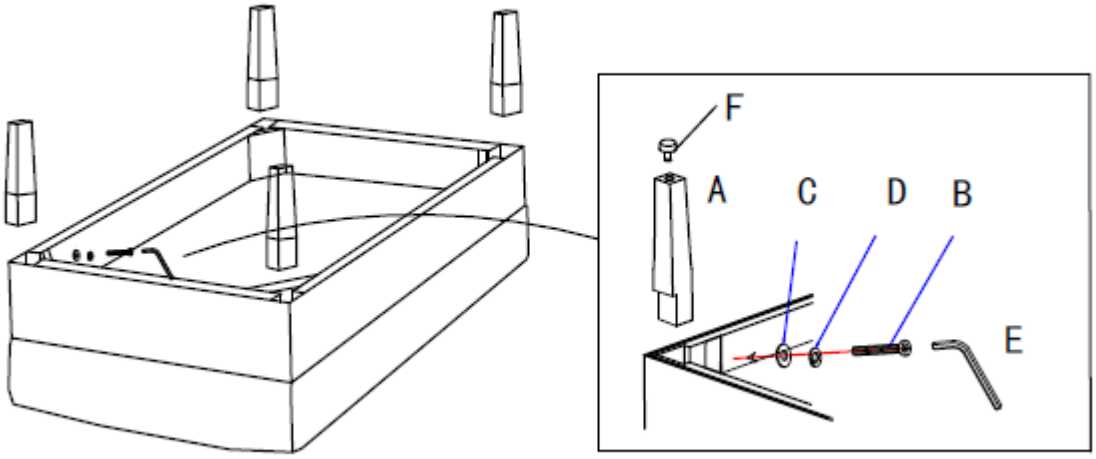

well. •

IMPORTANT: We would advise that at this stage the top remains inside the original packaging, or lay onto a clean carpet or banket to avoid damage to the surface.

Step Two

Carefully lift and stand product in upright position.

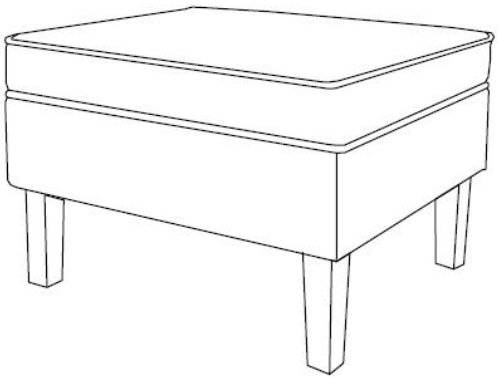

Finish.

Safety Instructions

Never drag furniture when moving it, always lift it.
When lifting or moving a table always do so from under frame and not the table top.
Periodically check all fixings to ensure none have come loose and re-tighten where necessary.
Please take care when handling or moving the furniture as careless handling may cause damage or injury.
Furniture can be dangerous if incorrectly installed. Assembly should be carried out by a competent person. No liability will be accepted for damage or injury caused by incorrectly insalled or assembled furniture.
It is recommended that before moving heavy objects to a new location they are completely dis-assembled to avoid personal injury or damage to the furniture. Please be careful to retain all fittings when doing this.

Care and Maintenance

WHEN CARED FOR PROPERLY, THIS HAND CRAFTED FURNITURE WILL PROVIDE YOU WITH YEARS OF ENJOYMENT IN YOUR HOME.

Foam Upholstery Cleaners / Cotton & Linen
Always read the label of the product you are using if it is compatible to the fabric, consult a professional if unsure
You should be able to clean most cotton / linen fabrics yourself, but there are always exceptions so it’s best to test a discrete area first, again if unsure consult professional upholstery cleaner.
Vacuum the upholstery to remove any dust, loose dirt, crumbs or pet hair. Remove any leftover pet hair with a sticky roller lint remover. It is important to remove every bit of loose dirt and pet hair to expose the fabric surface to the cleaning agent.
Spray a small area of your upholstery with foam upholstery cleaner following the product instructions. It is advised to test a discrete area first to ensure that the upholstery cleaner will not damage the fabric. With most upholstery sprays, you spray them on, and take a damp sponge and spread the foam evenly on the fabric. Allow it to dry completely, and then vacuum.

Tips & Warnings:

- Spot clean any serious stains first and then continue to clean the entire piece of furniture with the upholstery cleaner. Again, follow the foam upholstery cleaner's directions of

spraying on, spreading, drying and vacuuming. Stain-resistant finish sprays extend the life of your upholstery. You may want to consider applying a stain-resistant finish to your furniture when it is new. Keep your furniture out of direct sunlight because it will fade the fabric. Baby wipes are a quick and fast way to clean up some spills.

- Extreme amounts of water / moisture are harmful to the fabric and will destroy it by loosening the weave and giving a baggy appearance.

Cleaning Velvets

Velvet is a very delicate material, which requires special care as it can be easily damaged. Velvet is a very luxurious fabric, which isn't easy to maintain. If not properly cleaned, its fabric can be crushed and damaged. Velvet made from synthetic materials is easier for cleaning. Follow the advice and tips presented below to avoid damaging the smooth surface of your velvet upholster.

Vacuum clean your upholstered furniture with the attachment designed for furniture. Make sure you collect all the loose fiber's (i.e. dust, feathers, hair) from your upholstered furniture, running it back and forth until the excess disappears from your velvet furniture.

Examine the pile of your velvet upholstery by running your hand from back to front, if its smooth this is the direction of the pile, brush it in this direction using a soft brush. If you want to remove stains from your velvet upholstered furniture, you should make the stain dry by applying a soft clean cloth on it to absorb any liquid. Don't apply too much pressure as this can crush the fibers. Continue removing the stain by making a cleaning solution. For it you will need only a little quantity of warm water and some drops of dish-wash detergent. Stir and shake this solution until suds occur. Apply the suds ONLY onto the stain carefully. You can also use a dry cleaning product to remove the stain (any good hardware store, read the manufacturer's instructions carefully!). After you clean the stain, let it dry well and brush it in the same direction as the pile until the velvet returns to its normal appearance.

A steam cleaner is perfect for removing stains, dirt and debris, disinfecting the velvet fabric, without leaving any damage to it. This process is best performed by a professional.

How to care for Leather

Always use reputable leather cleaning products and follow the manufacturer's recommended instructions. Regular wiping with a damp, soft cloth is often enough to keep a leather sofa looking pristine.

Vacuum your leather sofa regularly, to remove dust and dirt, especially along the stitch lines. Keeping your leather seating at least 50cm from a heat source will avoid the leather cracking.

Spilt liquid should be blotted immediately with a dry cloth or kitchen paper until it is dry, do not rub the area as this could cause discoloration damaging the finish.
Avoid overexposing your furniture to sunlight, it will help to prevent colour fading.
Beware of sharp objects that could tear, cut, or scratch leather.

How to care for Wood (unpainted)

Furniture with a hard lacquer, wax polish or painted surface should be dusted with a dry cloth.
Waxed furniture will need to be given a coat of beeswax a couple of times a year to help maintain its luster.
Spray polishes are best avoided as they contain silicones which may spoil the furniture's surface by building up over time.
Make sure all surfaces are protected from heat and liquids by mats and coasters. Wipe up spills immediately and ensure that a mat or pad is placed under paper if you are writing.
Extendable dining tables should be left extended for the first few months to avoid an uneven appearance. Likewise, lamps and ornaments should also be moved regularly.
Furniture will endure most temperatures in the home but it is best to avoid placing furniture next to heat sources such as radiators or fires. Be particularly careful with solid wood as the lack of humidity caused by central heating can cause damage such as warping.

How to care for Painted Wood finishes

Hand painted brush stroke finish's will hold up to everyday wear and tear quite nicely. However, it is important to remember that your piece is still a wood piece of furniture and should be cared for as such.
Painted furniture still requires regular dusting with a damp cloth. When very soiled wash with a solution of mild, non-abrasive detergent and warm water. Wring a cloth nearly dry and work on a small section at a time, then rinse with clear water drying after..
Never leave water to settle on the surface as this will cause damage. Any liquid spilled onto the item should be cleaned up immediately using an absorbent cloth.
AVOID chemical cleaners or liquid furniture polish including direct contact with greasy substances
As with all natural wood products, there will be some movement within the parts as the furniture acclimatises to its surroundings, you may see slight chipping and cracks where panels meet, this is a completely natural occurrence with ALL painted products using natural solid timbers.
Painted surfaces can be carefully touched up with matching paint.
There will be various brush lines, slubs, and little inconsistencies in the painted finish, this is all part of the relaxed handfinished look and feel of hand painted collections.

How to care for Metal furniture

Metal furniture requires minimal maintenance:

Cleaning your metal furniture is very simple. Use a soft cotton cloth and clean with mild detergent or water, using a towel immediately dry the furniture afterwards.

Metal furniture is usually damaged due to rust, as a precaution a soft wax after cleaning will help seal it.

If it has a few spots of rust, you can treat it with rust remover, following the manufacturers guidelines. (some finishes are made to look like rust)

Smudges and smears can be removed from metal furniture by using a window cleaner and a paper towel.

Indoor metal furniture is not recommended for outdoor use.

WHEN CARED FOR PROPERLY, THIS HAND CRAFTED FURNITURE WILL PROVIDE YOU WITH YEARS OF ENJOYMENT IN YOUR HOME.

PLEASE KEEP THESE INSTRUCTIONS FOR FUTURE REFERENCE